PRODUCT CALCULATION BASIS

UNO U-41-3-P 2mm

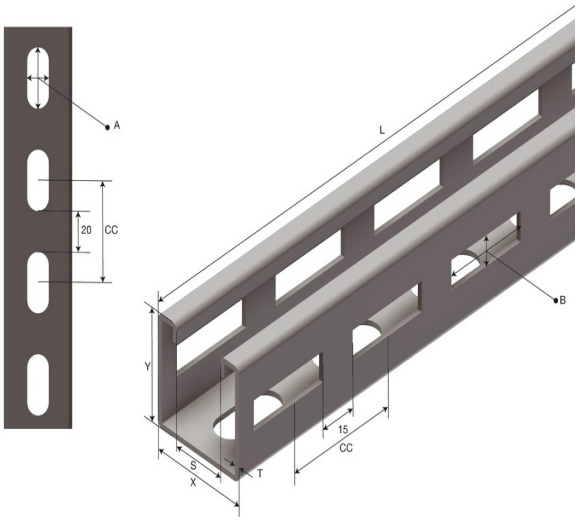

Material Data	
Material	AISI 316L
Weight (kg/m)	1,89

Dimensional Data	
L - Length (mm)	3000
T - Thickness (mm)	2,0
X - (mm)	41
Y - (mm)	41
A - Hole size (mm)	13x30
B - Hole size (mm)	11x35
S - Spacing (mm)	22,5
CC - (mm)	50

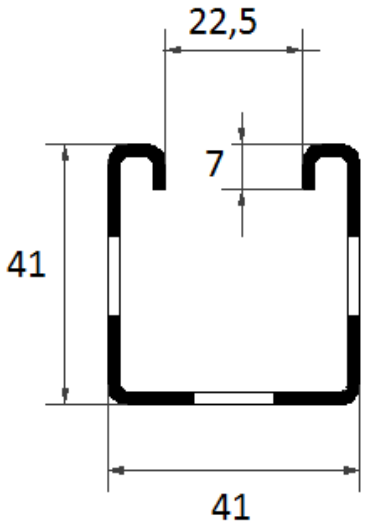

Mechanical Properties	
A_E Effective cross-section area (mm^2)	227
I_{TE} Effective moment of inertia, torsion (mm^4)	301
I_{XE} Effective moment of inertia, bending about X-axis (mm^4)	56 700
I_{YE} Effective moment of inertia, bending about Y-axis (mm^4)	65 189
W_{XP} Moment of resistance, bending about X-axis, perforated (mm^3)	2 656
W_{YP} Moment of resistance, bending about Y-axis, perforated (mm^3)	3 180
C_{TP} Moment of resistanse, torsion, perforated (mm^3)	150