INTENDED USE

FRP UNO bracket for connecting FRP UNO sections togther.

INSTRUCTION FOR USE

Fix FRP UNO nuts in the channel.
Attach the bracket connecting the sections.
Adjust and tighten securely.

UNO Angle Bracket UNO SA-HO 3x2 T

Typical installation

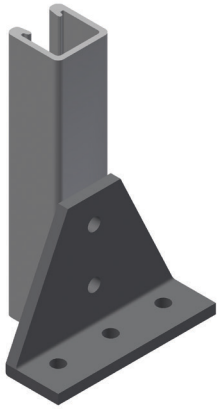
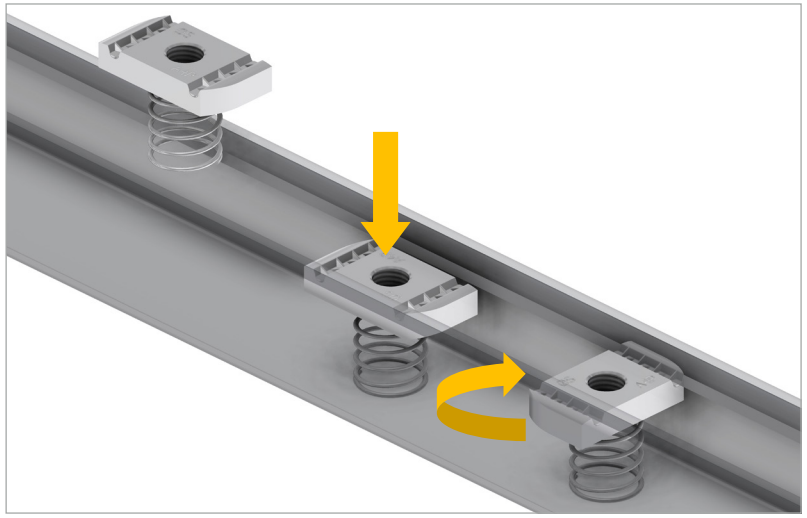
Fitting UNO nut with spring